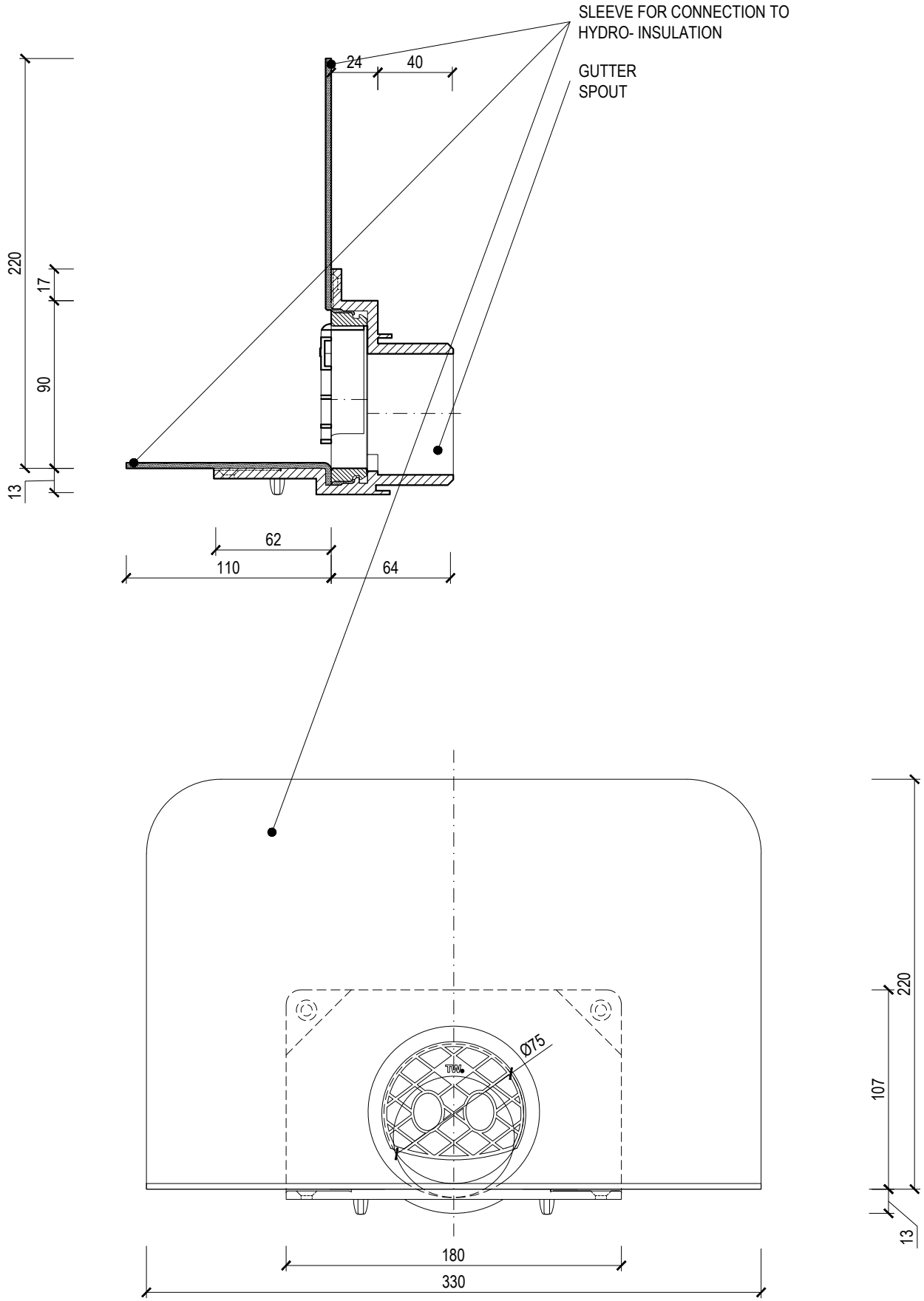

ROUND GUTTER SPOUT

TYPE: TWC 75 ___ x0	___ = custom-made sleeve (TPO, PE, EPDM, STE,...)	TOPWET ROOF ELEMENTS
CODE: 226820075	WEIGHT: 0,78 kg	WWW.TOPWET.CZ
SCALE: 1:3	MATERIAL: PVC	INFO: +420 777 701 241