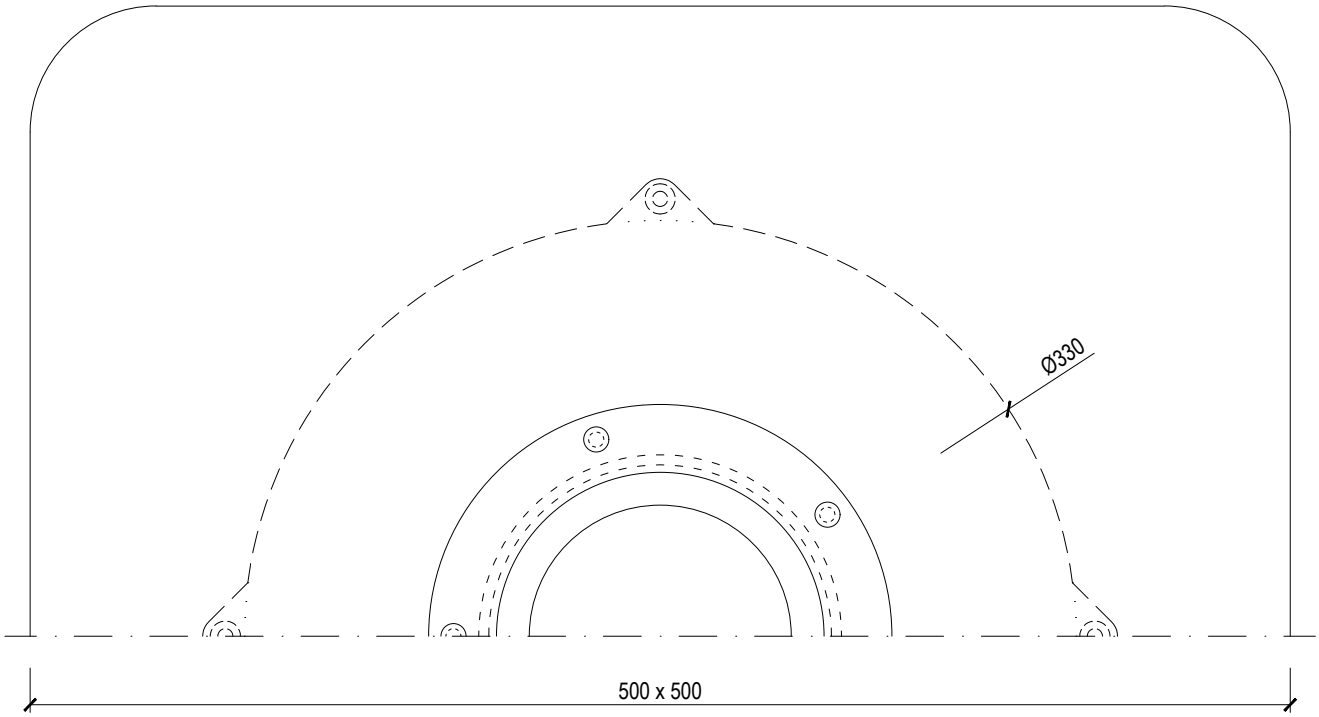

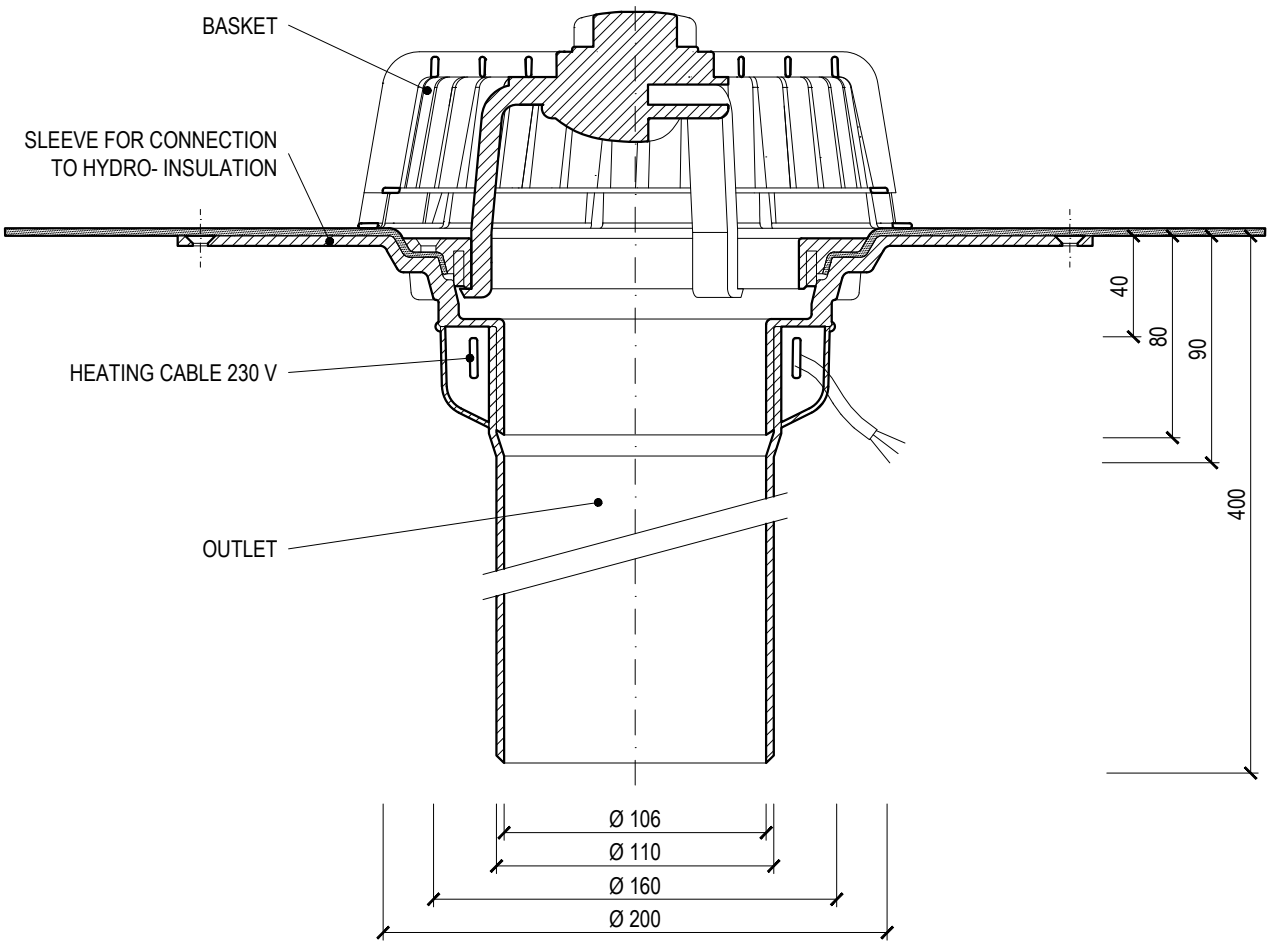

HEATED EXTENDED SINGLE-WALL OUTLET

TYPE: TWJE 110 PVC		TOPWET ROOF ELEMENTS
CODE: 220230110	WEIGHT: 1,99 kg	WWW.TOPWET.CZ
SCALE: 1:3	MATERIAL: POLYAMIDE	INFO: +420 777 701 241