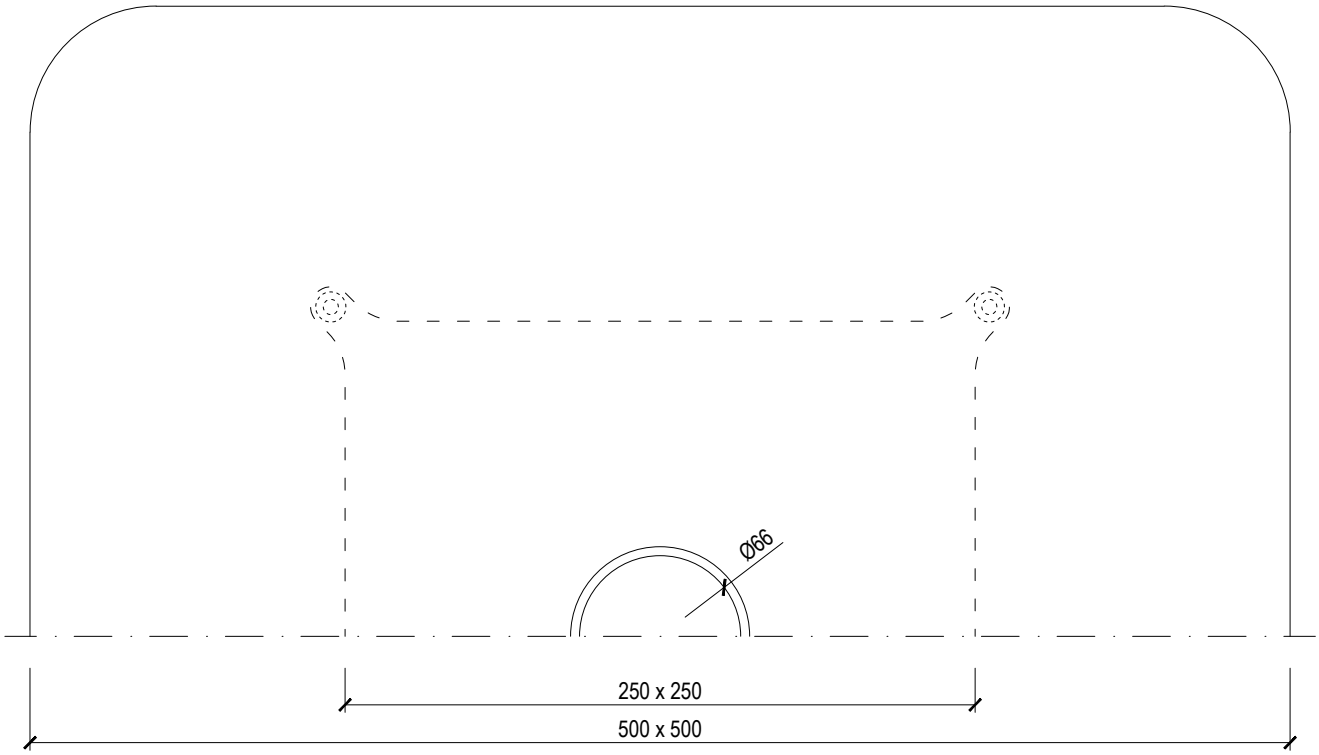

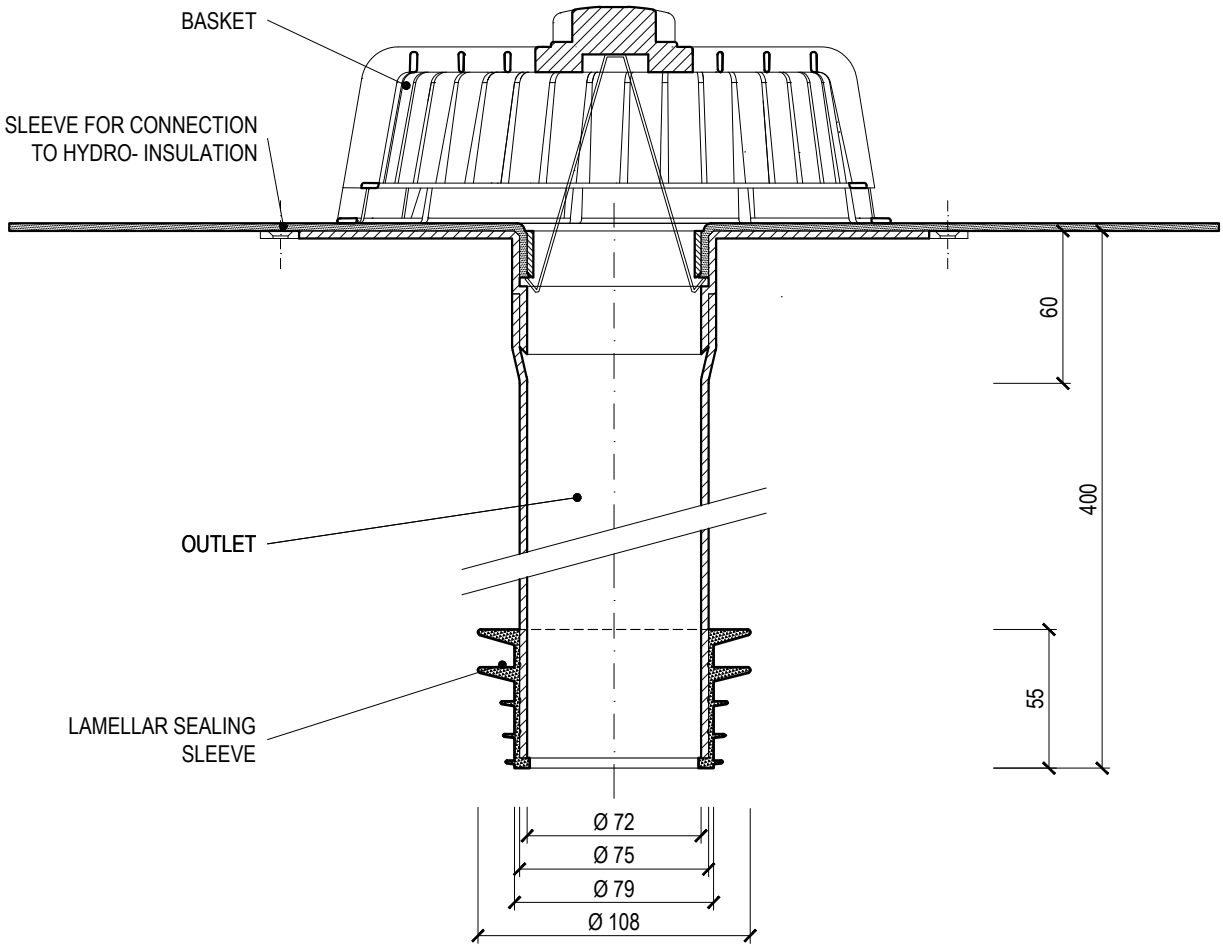

SINGLE-WALL SANITATION OUTLET FOR ROOFS THAT ARE NOT HEAT-INSULATED

TYPE: TW SAN BZ 75 BIT		TOPWET ROOF ELEMENTS
CODE: 217110075	WEIGHT: 2,22 kg	WWW.TOPWET.CZ
SCALE: 1:3	MATERIAL: POLYAMIDE	INFO: +420 777 701 241